DIMENSIONAL DRAWING – HORIZONTAL ON-FOOT EXECUTION – IM1001 (B3)

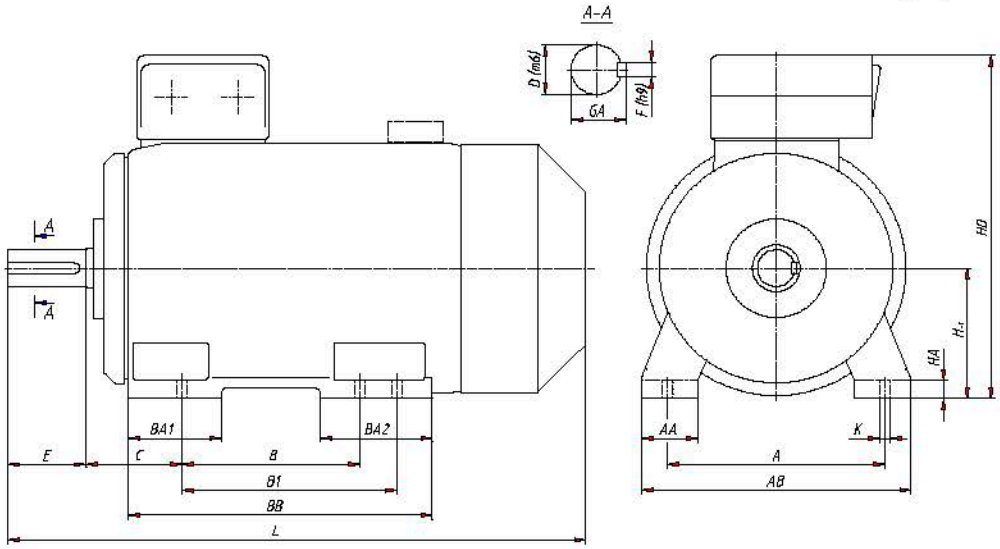

Motor typ	2p	A	B	B1	C	D	E	F	GA	H	HA	K	AA	AB	BA1	BA2	BB	HD	L
SEE 315	2	508	457	508	216	65	140	18	69	315	40	28	120	620	150	180	637	865	1315
SEE 315	4 ÷ 6	508	457	508	216	80	170	22	85	315	40	28	120	620	150	180	637	865	1345
SEE 355	2	610	560	630	254	80	170	22	85	355	50	28	150	720	250	300	890	935	1580
SEE 355	4 ÷ 8	610	560	630	254	100	210	28	106	355	50	28	150	720	250	300	890	935	1620
Sh 355...s	2	610	900	-	200	70	140	20	74.5	355	45	28	160	730	265	265	1045	995	1800
Sh 355...s	4 ÷ 8	610	900	-	200	100	210	28	106	355	45	28	160	730	265	265	1045	995	1870

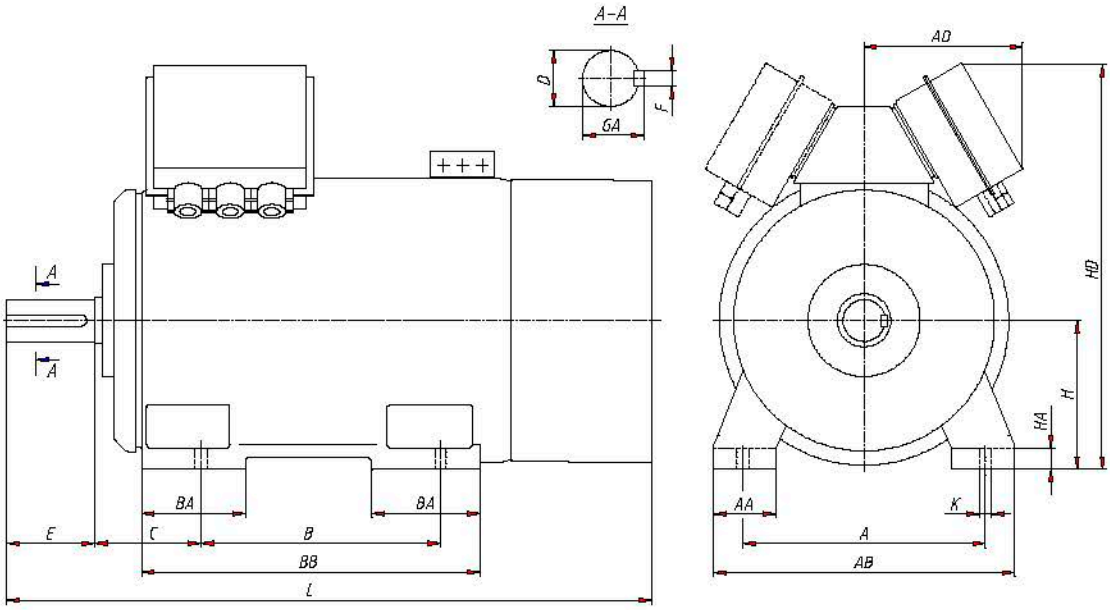

Motor type	2p	A	B	C	D	E	F	GA	H	HA	K	AA	AB	AD	BA	BB	HD	L
Sh 400...s	2	686	1000	224	80	170	22	85	400	50	35	175	840	520	265	1160	1255	1980
Sh 400...s	4 ÷ 8	686	1000	224	110	210	28	116	400	50	35	175	840	520	265	1160	1255	1960
Sh 450...s	2	750	1120	450	80	170	22	85	450	60	35	205	940	560	340	1320	1356	2410
Sh 450...s	4 ÷ 12	750	1120	254	110	210	28	116	450	60	35	205	940	560	340	1320	1356	2105
Sh 500...s	4 ÷ 10	850	1250	280	120	210	32	127	500	70	42	223	1050	560	300	1450	1470	2430

DIMENSIONAL DRAWING – FLANGE FOOT EXECUTION – IM2001 (B35)

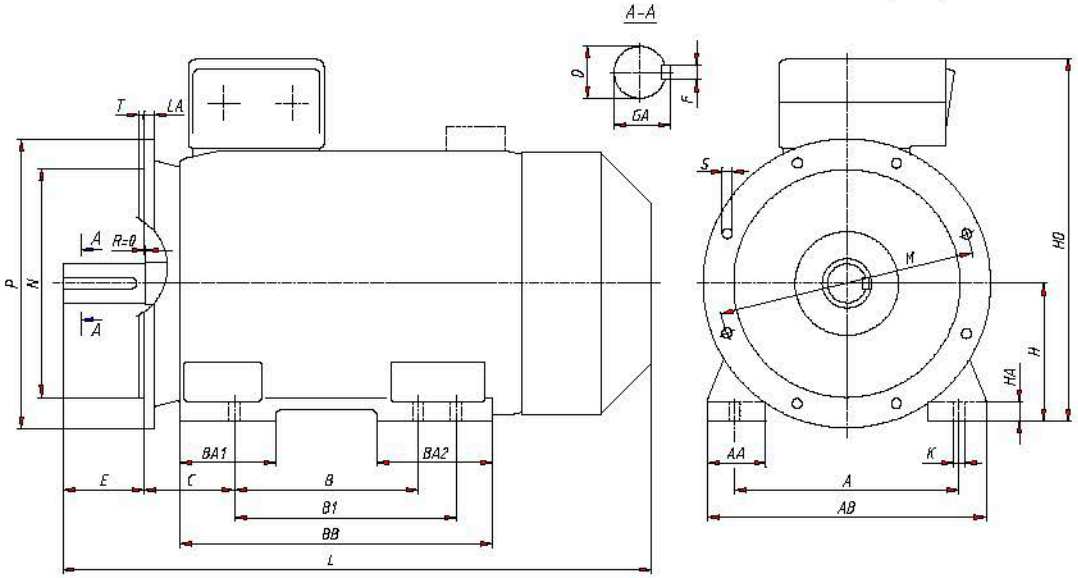

Motor type	2p	A	B	B1	C	D	E	F	GA	H	HA	K	AA	AB	BA1	BA2	BB	HD	L	LA	P	M	N	S	T
SLEE 315	2	508	457	508	216	65	140	18	69	315	40	28	120	620	150	180	637	865	1315	22	660	600	550	22	6
SLEE 315	4 ÷ 6	508	457	508	216	80	170	22	85	315	40	28	120	620	150	180	637	865	1345	22	660	600	550	22	6
SLEE 355	2	610	560	630	254	80	170	22	85	355	50	28	150	720	250	300	890	935	1580	24	800	740	680	22	6
SLEE 355	4 ÷ 8	610	560	630	254	100	210	28	106	355	50	28	150	720	250	300	890	935	1620	24	800	740	680	22	6
SLh 355...s	2	610	900	-	254	70	140	20	74.5	355	45	28	160	730	265	265	1045	995	1854	24	800	740	680	22	6
SLh 355...s	4 ÷ 8	610	900	-	254	100	210	28	106	355	45	28	160	730	265	265	1045	995	1924	24	800	740	680	22	6

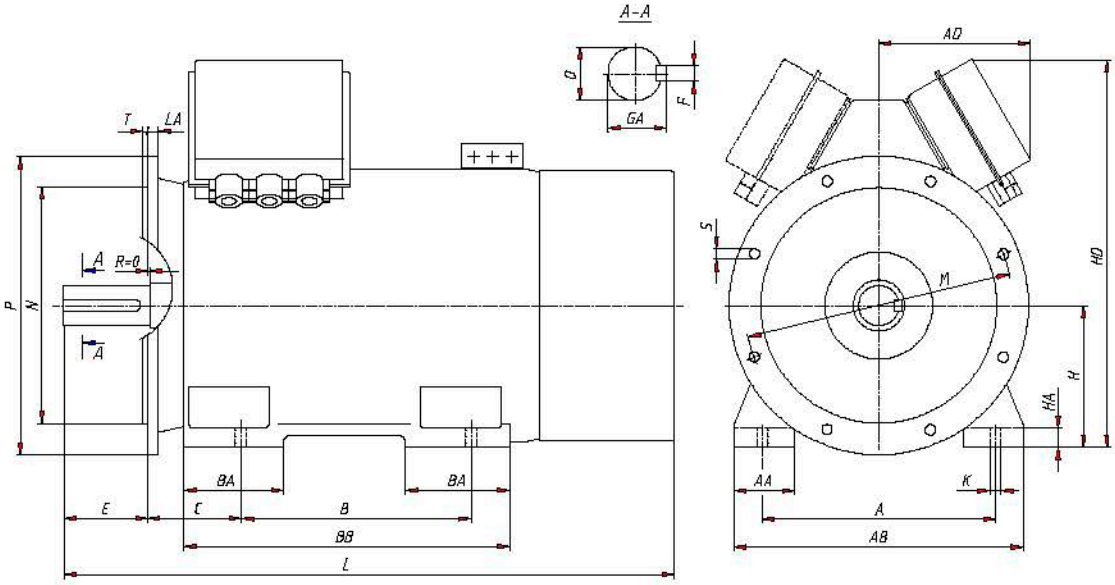

Motor type	2p	A	B	C	D	E	F	GA	H	HA	K	AA	AB	AD	BA	BB	HD	L	LA	P	M	N	S	T
SLh 400...s	2	686	1000	280	80	170	22	85	400	50	35	175	840	520	265	1160	1255	2031	30	1000	940	880	25	6
SLh 400...s	4 ÷ 8	686	1000	280	110	210	28	116	400	50	35	175	840	520	265	1160	1255	2016	30	1000	940	880	25	6
SLh 450...s	4 ÷ 12	750	1120	315	110	210	28	116	450	60	35	205	940	560	340	1320	1356	2162	30	1150	1080	1000	28	6
SLh 500...s	4 ÷ 10	850	1250	355	120	210	32	127	500	70	42	223	1050	560	300	1450	1470	2505	30	1150	1080	1000	28	6

DIMENSIONAL DRAWING – FLANGE FOOT EXECUTION – IM3011 (V1)

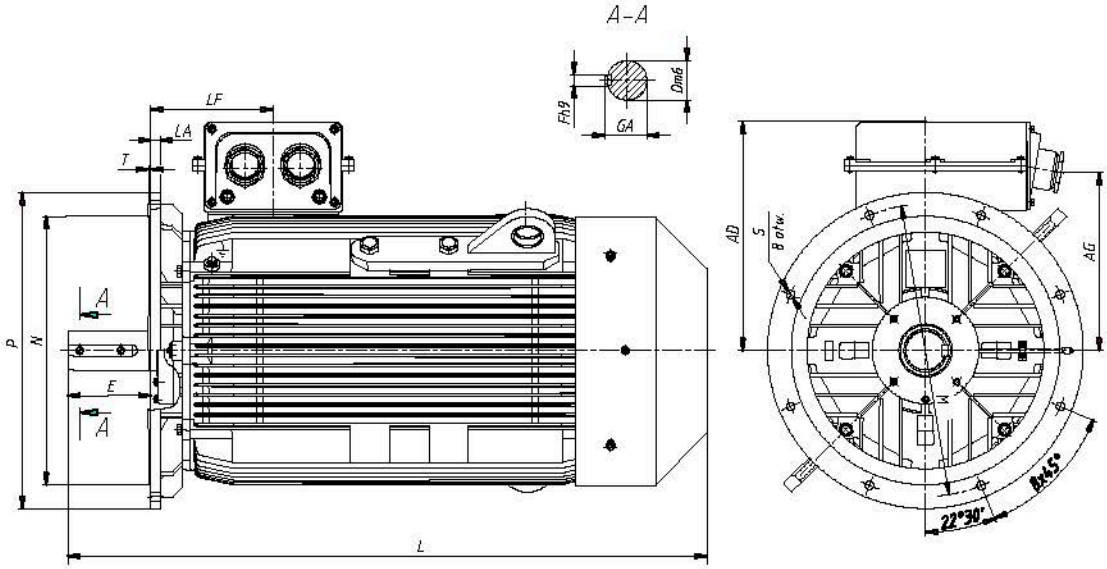

Motor type	2p	AD	AG	Dm6	E	Fh9	GA	L	LA	LF	M	N	P	S	T
SVEE 355	4 ÷ 8	580	450	100	210	28	106	1620	24	310	740	680	800	22	6
SVh 355...s	4 ÷ 8	638	509	100	210	28	106	1955	24	356	740	680	800	22	6

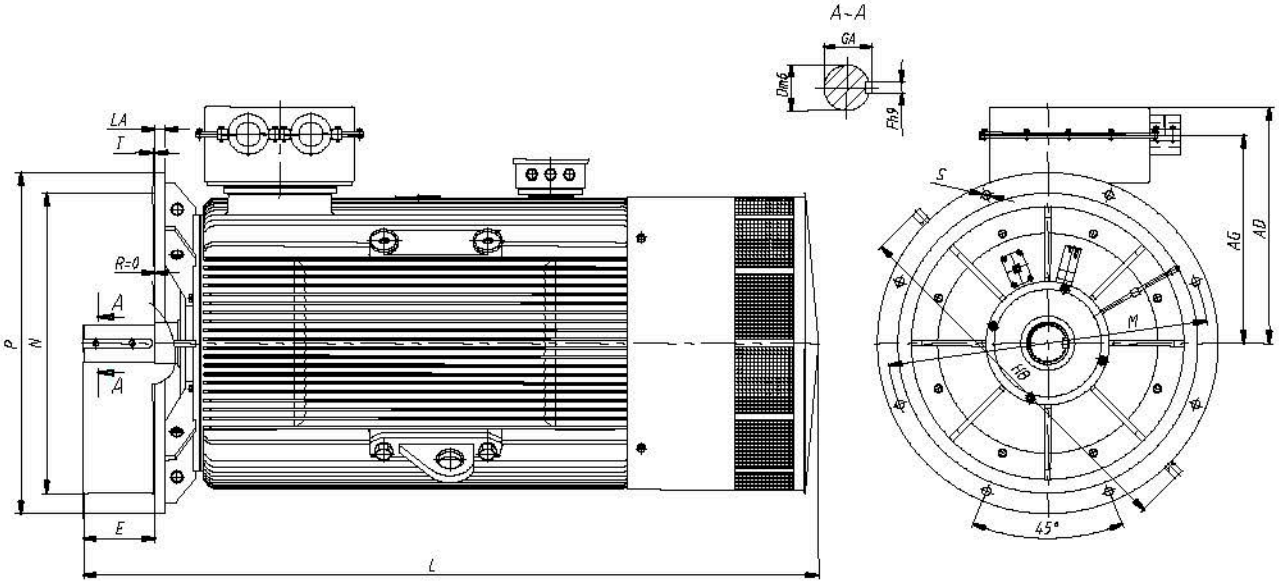

Motor type	2p	AD	AG	Dm6	E	Fh9	GA	L	LA	HB	M	N	P	S	T
SVh 400...s	4 ÷ 8	745	665	110	210	28	116	2130	37	1180	940	880	1000	23	6
SVh 450...s	4 ÷ 12	849	688	110	210	28	116	2350	30	1290	1080	1000	1150	28	6
SVh 500...s	4 ÷ 10	935	796	120	210	32	127	2504	30	1410	1080	1000	1150	28	6