Wymiary montażowe i gabarytowe silników NEMA-PREMIUM w wykonaniu na łapach
Mounting dimensions and overall dimensions for foot-mounted NEMA-PREMIUM

Standard Horizontal

Seria i wielkość silnika	Wymiary montażowe Mounting dimensions [inches]											
Type and Frame	A	B	D	2E	2F	H	R	U	N-W	AA	BA	ES
SIE143T	6.62	5.83	3.50	5.50	4.00	0.34	0.771	0.875	2.25	3/4	2.25	1.52
SIE145T	6.62	7.00	3.50	5.50	5.00	0.34	0.771	0.875	2.25	3/4	2.25	1.52

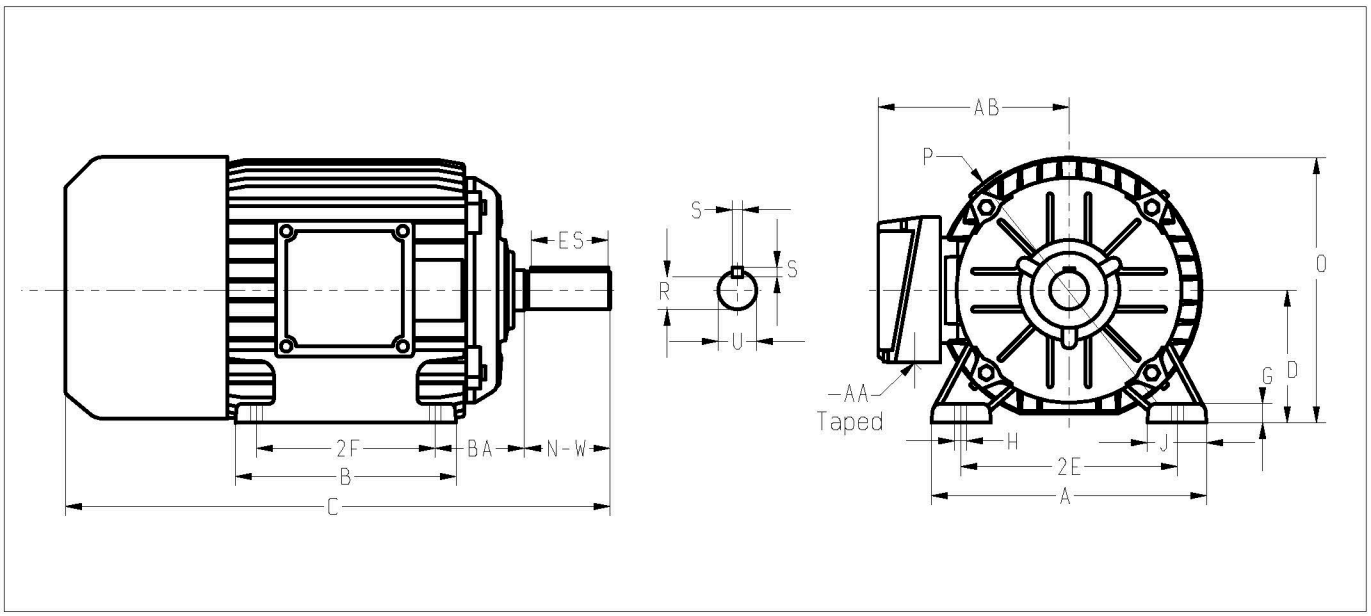

Seria i wielkość silnika	Wymiary gabarytowe Overall dimensions [inches]							
Type and Frame	C	G	J	O	P	S	AB	Łożysko nr Bearing No
SIE143T	14.20	0.39	1.66	7.48	8.27	0.188	6.50	6205 2Z
SIE145T	15.15	0.39	1.66	7.48	8.27	0.188	6.50	6205 2Z

Wymiary montażowe i gabarytowe silników NEMA-PREMIUM w wykonaniu na łapach
Mounting dimensions and overall dimensions for foot-mounted NEMA-PREMIUM

Standard Horizontal

Seria i wielkość silnika	Wymiary montażowe [inches]							Mounting dimensions				
Type and Frame	A	B	D	2E	2F	H	R	U	N-W	AA	BA	ES
SIE182T	9.00	8.31	4.50	7.50	4.50	0.41	0.986	1.125	2.75	1	2.75	1.94
SIE184T	9.00	8.31	4.50	7.50	5.50	0.41	0.986	1.125	2.75	1	2.75	1.94
SIE213T	10.24	8.70	5.25	8.50	5.50	0.41	1.201	1.375	3.38	1	3.50	2.55
SIE215T	10.24	10.28	5.25	8.50	7.00	0.41	1.201	1.375	3.38	1	3.50	2.55
SIE254T	12.28	9.92	6.25	10.00	8.25	0.55	1.416	1.625	4.00	1 1/4	4.25	3.11
SIE256T	12.28	11.65	6.25	10.00	10.00	0.55	1.416	1.625	4.00	1 1/4	4.25	3.11
SIE284T	13.78	13.11	7.00	11.00	9.50	0.55	1.591	1.875	4.62	1 1/2	4.75	3.53
SIE284TS	13.78	13.11	7.00	11.00	9.50	0.55	1.416	1.625	3.25	1 1/2	4.75	2.10
SIE286T	13.78	13.11	7.00	11.00	11.00	0.55	1.591	1.875	4.62	1 1/2	4.75	3.53
SIE286TS	13.78	13.11	7.00	11.00	11.00	0.55	1.416	1.625	3.25	1 1/2	4.75	2.10

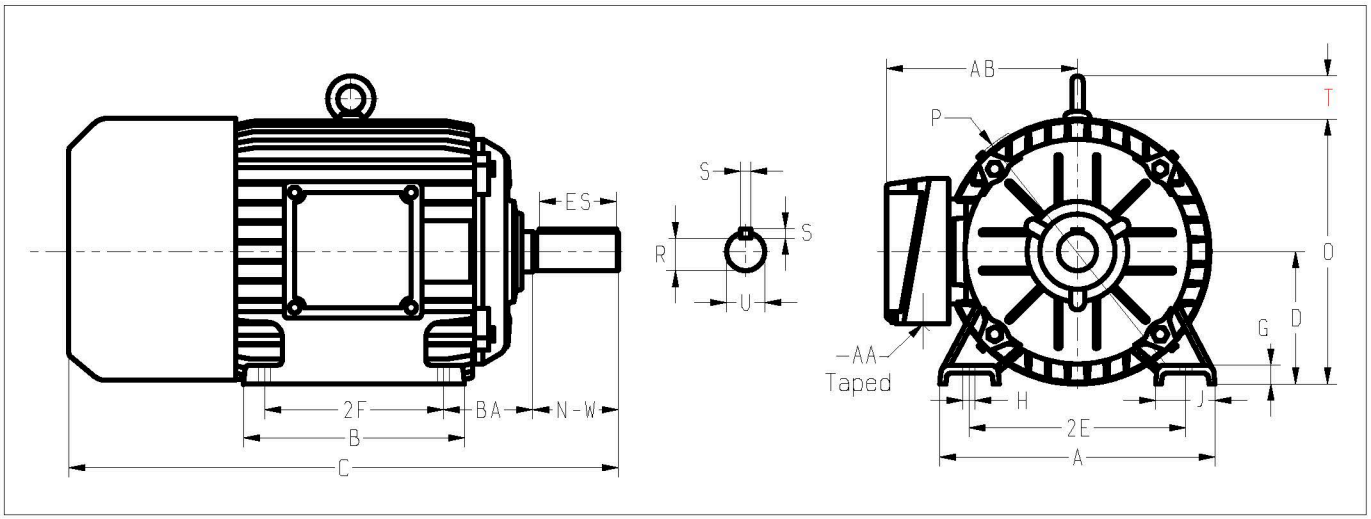

Seria i wielkość silnika	Wymiary gabarytowe [inches]							Overall dimensions	
Type and Frame	C	G	J	O	P	S	T	AB	Łożysko nr Bearing No
SIE182T	17.70	0.60	2.13	9.09	9.53	0.250	1.77	7.90	6306 2Z
SIE184T	17.70	0.60	2.13	9.09	9.53	0.250	1.77	7.90	6306 2Z
SIE213T	22.25	0.67	2.20	10.96	11.61	0.312	2.08	8.92	6308 2Z
SIE215T	22.88	0.67	2.20	10.96	11.61	0.312	2.08	8.92	6308 2Z
SIE254T	25.83	0.58	2.36	13.18	14.17	0.375	2.08	10.08	6309 2Z
SIE256T	27.60	0.58	2.36	13.18	14.17	0.375	2.08	10.08	6309 2Z
SIE284T	31.16	0.89	2.75	14.01	14.17	0.500	2.08	10.34	6311 2Z
SIE284TS	27.20	0.89	2.75	14.01	14.17	0.375	2.08	10.34	6311 2Z
SIE286T	31.16	0.89	2.75	14.01	14.17	0.500	2.08	10.34	6311 2Z
SIE286TS	27.20	0.89	2.75	14.01	14.17	0.375	2.08	10.34	6311 2Z

Wymiary montażowe i gabarytowe silników NEMA-PREMIUM w wykonaniu kołnierzowym na łapach
Mounting dimensions and overall dimensions for foot-C face-mounted NEMA-PREMIUM motors

Seria i wielkość silnika	Wymiary montażowe [inches]									Mounting dimensions						
Type and Frame	A	B	D	2E	2F	H	R	S	U	AH	AJ	AK	BA	BB	BD	ES
SIE143TC	6.62	5.83	3.50	5.50	4.00	0.34	0.771	0.188	0.875	2.12	5.875	4.50	2.25	0.16	6.50	1.52
SIE145TC	6.62	7.00	3.50	5.50	5.00	0.34	0.771	0.188	0.875	2.12	5.875	4.50	2.25	0.16	6.50	1.52

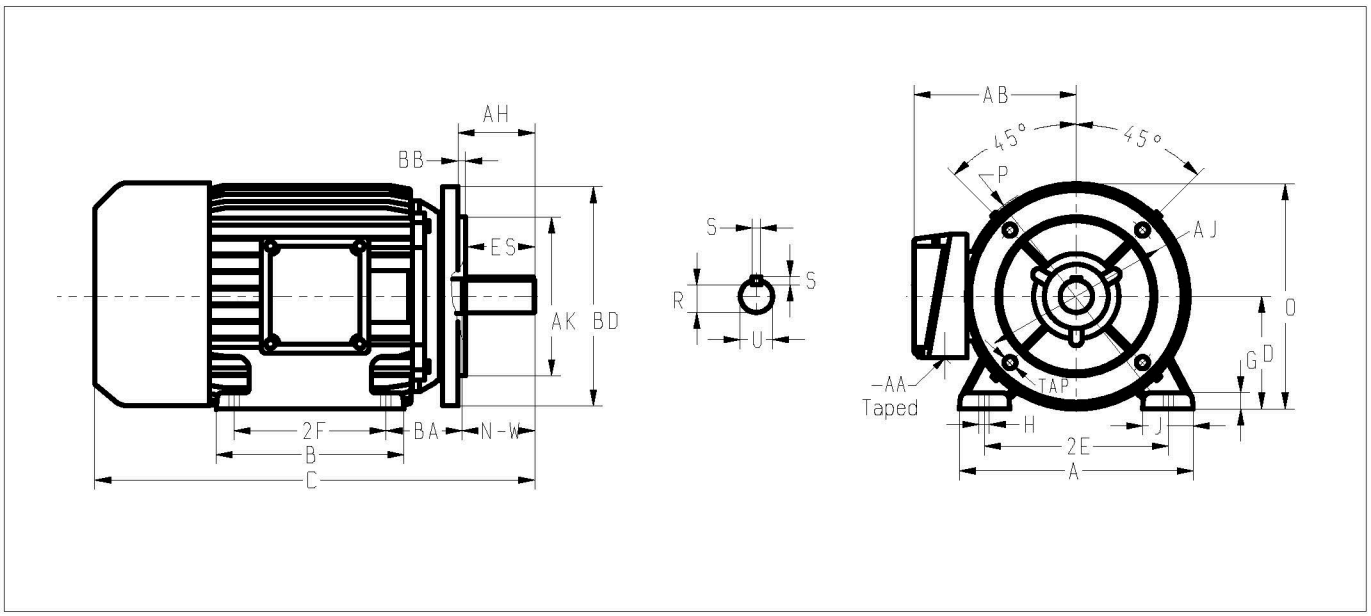

Seria i wielkość silnika	Wymiary gabarytowe [inches]									Overall dimensions
Type and Frame	C	G	J	O	P	N-W	AA	AB	TAP	Łożysko nr Bearing No
SIE143TC	14.20	0.39	1.66	7.48	8.27	2.25	3/4	6.50	3/8-16	6205 2Z
SIE145TC	15.15	0.39	1.66	7.48	8.27	2.25	3/4	6.50	3/8-16	6205 2Z

Wymiary montażowe i gabarytowe silników NEMA-PREMIUM w wykonaniu kołnierzowym na łapach
Mounting dimensions and overall dimensions for foot-C face-mounted NEMA-PREMIUM motors

Seria i wielkość silnika	Wymiary montażowe [inches]									Mounting dimensions						
Type and Frame	A	B	D	2E	2F	H	R	S	U	AH	AJ	AK	BA	BB	BD	ES
SIE182TC	9.00	8.31	4.50	7.50	4.50	0.41	0.986	0.250	1.125	2.62	7.25	8.50	2.75	0.25	8.90	1.94
SIE184TC	9.00	8.31	4.50	7.50	5.50	0.41	0.986	0.250	1.125	2.62	7.25	8.50	2.75	0.25	8.90	1.94
SIE213TC	10.24	8.70	5.25	8.50	5.50	0.41	1.201	0.312	1.375	3.13	7.25	8.50	3.50	0.25	8.90	2.55
SIE215TC	10.24	10.28	5.25	8.50	7.00	0.41	1.201	0.312	1.375	3.13	7.25	8.50	3.50	0.25	8.90	2.55
SIE254TC	12.28	9.92	6.25	10.00	8.25	0.55	1.416	0.375	1.625	3.75	7.25	8.50	4.25	0.25	10.00	3.11
SIE256TC	12.28	11.65	6.25	10.00	10.00	0.55	1.416	0.375	1.625	3.75	7.25	8.50	4.25	0.25	10.00	3.11
SIE284TC	13.78	13.11	7.00	11.00	9.50	0.55	1.591	0.500	1.875	4.38	9.00	10.50	4.75	0.25	11.25	3.53
SIE284TSC	13.78	13.11	7.00	11.00	9.50	0.55	1.416	0.375	1.625	3.00	9.00	10.50	4.75	0.25	11.25	2.10
SIE286TC	13.78	13.11	7.00	11.00	11.00	0.55	1.591	0.500	1.875	4.38	9.00	10.50	4.75	0.25	11.25	3.53
SIE286TSC	13.78	13.11	7.00	11.00	11.00	0.55	1.416	0.375	1.625	3.00	9.00	10.50	4.75	0.25	11.25	2.10

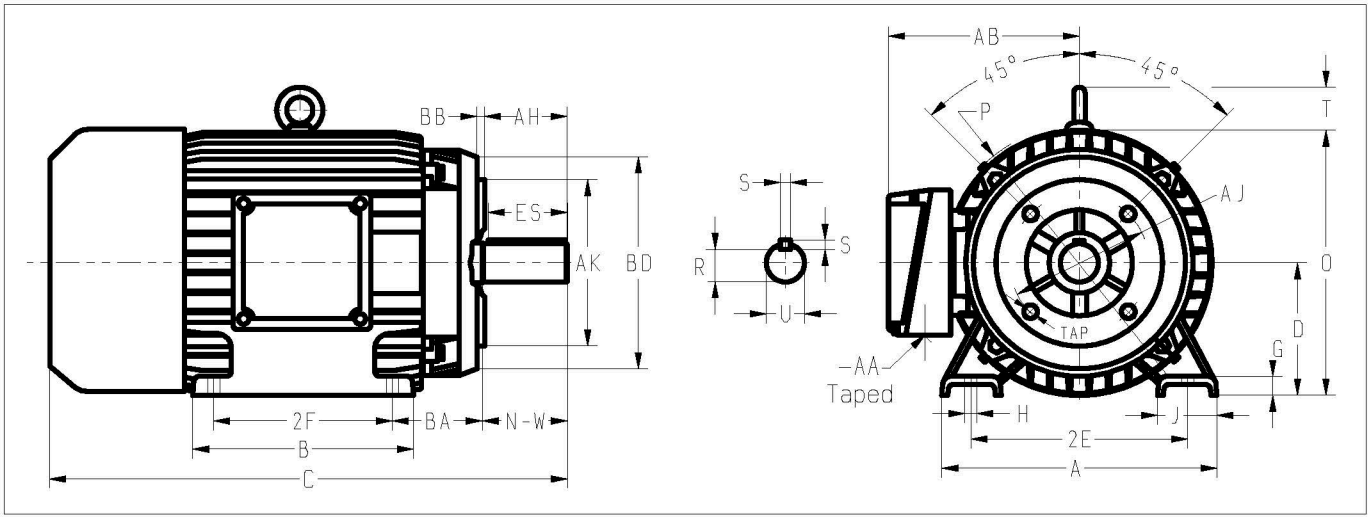

Seria i wielkość silnika	Wymiary gabarytowe [inches]								Overall dimensions		
Type and Frame	C	G	J	O	P	T	N-W	AA	AB	TAP	Łożysko nr Bearing No
SIE182TC	17.70	0.60	2.13	9.09	9.53	1.77	2.75	1	7.90	1/2-13	6306 2Z
SIE184TC	17.70	0.60	2.13	9.09	9.53	1.77	2.75	1	7.90	1/2-13	6306 2Z
SIE213TC	22.25	0.67	2.20	10.96	11.61	2.08	3.38	1	8.92	1/2-13	6308 2Z
SIE215TC	22.88	0.67	2.20	10.96	11.61	2.08	3.38	1	8.92	1/2-13	6308 2Z
SIE254TC	25.83	0.58	2.36	13.18	14.17	2.08	4.00	1 1/4	10.08	1/2-13	6309 2Z
SIE256TC	27.60	0.58	2.36	13.18	14.17	2.08	4.00	1 1/4	10.08	1/2-13	6309 2Z
SIE284TC	31.16	0.89	2.75	14.01	14.17	2.08	4.62	1 1/2	10.34	1/2-13	6311 2Z
SIE284TSC	27.20	0.89	2.75	14.01	14.17	2.08	3.25	1 1/2	10.34	1/2-13	6311 2Z
SIE286TC	31.16	0.89	2.75	14.01	14.17	2.08	4.62	1 1/2	10.34	1/2-13	6311 2Z
SIE286TSC	27.20	0.89	2.75	14.01	14.17	2.08	3.25	1 1/2	10.34	1/2-13	6311 2Z